Transfer or duplication of this document as well as the utilisation or communication of its content are not permitted unless express consent is granted. Violations give rise to claims for damages. All rights reserved in case of patent, utility model or design patent registrations.

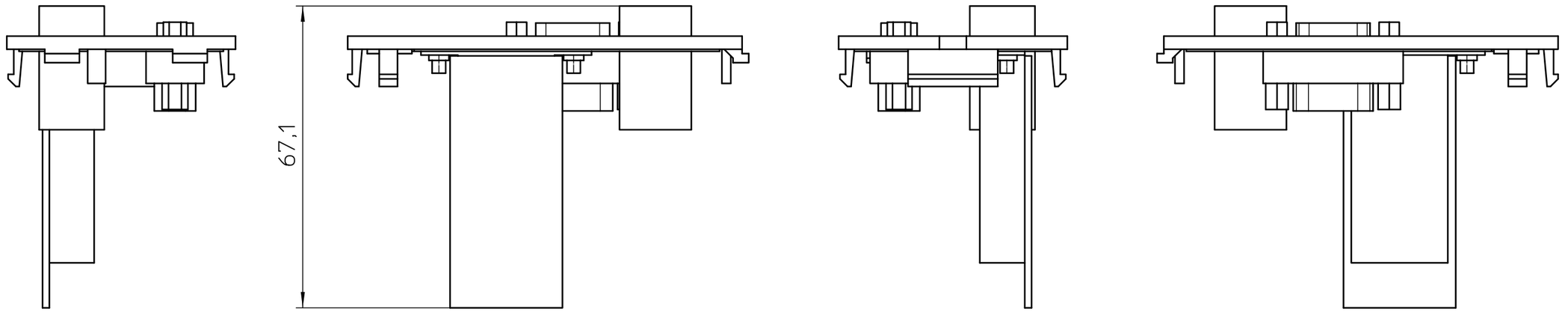

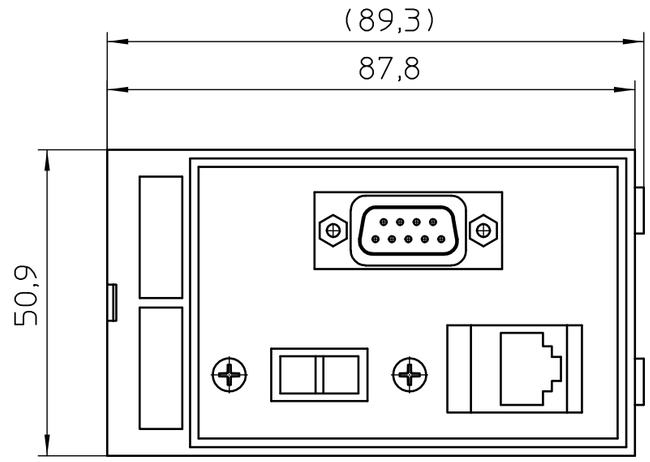

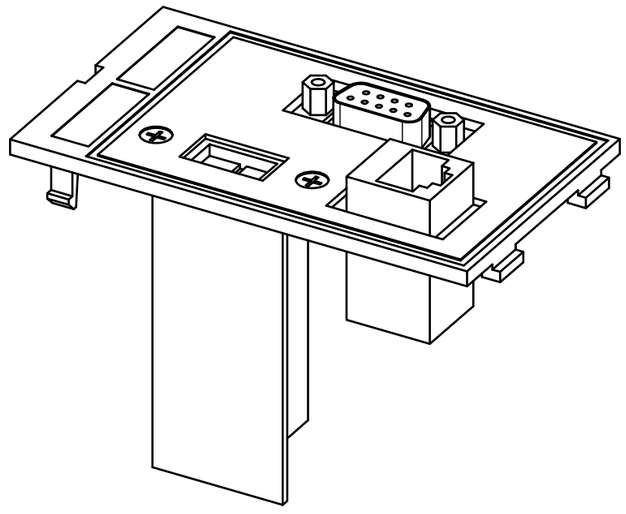

General Information
- Simplified representation
- Document excluded from change process
- Linear dimensions [mm]

DIN A3	document-No. / RI 01212214 / 00	date 06.05.2019	scale 1:1
PHOENIX CONTACT	ident.-No. 1404497	document-type TECDOC 2D_Productdrawing	
page 1 of 1	description SI-FP-R1A-U1A-D1A		