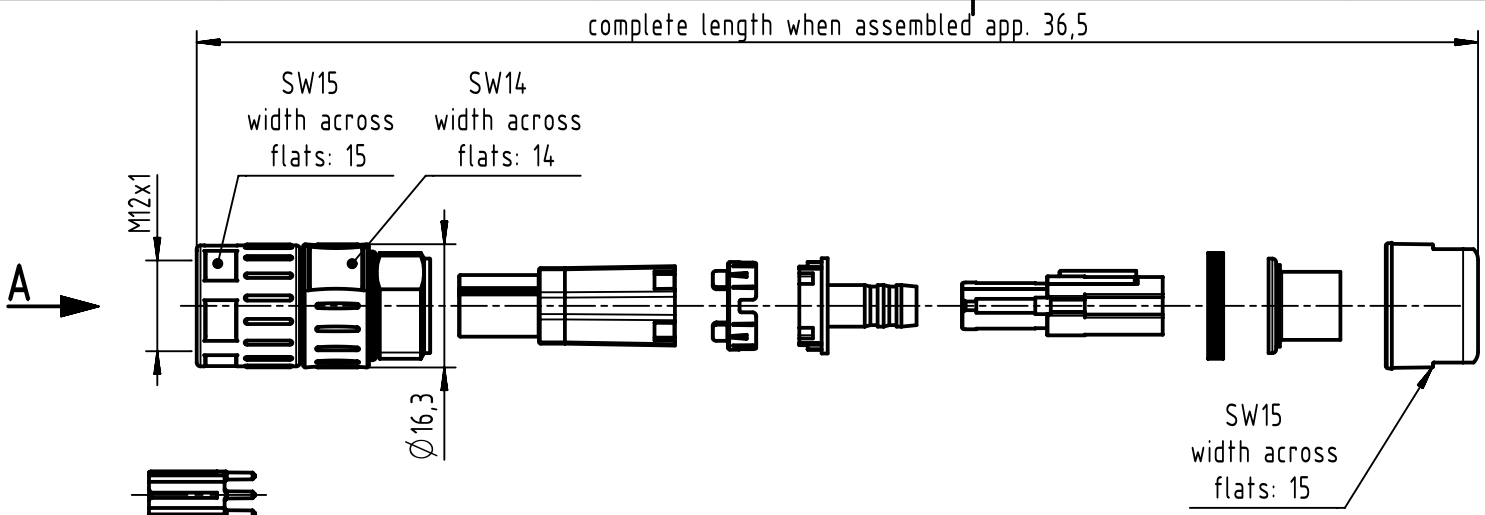

assembly aid enclosed

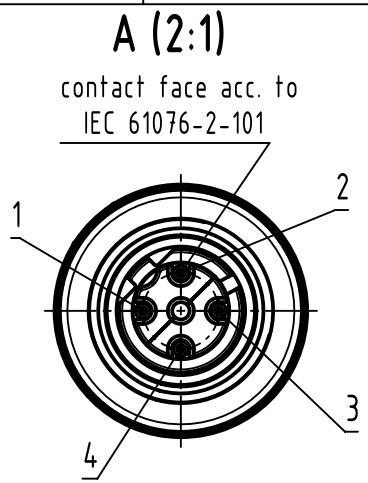

order contacts separately

Cable description	Cable diameter	Wire gauge	P/N contact	P/N Crimping insert	P/N Crimping Tool	P/N Mounting tool
BE 43800 4 PR CAT5E SF/UTP 26AWG X-FRNC	6,7mm	AWG 26-22	09 67 000 5476	0999 000 0650	0999 000 0647	0999 000 0639
BETATRANS DATA C-FLEX Cat.5 1x4 AWG 22/7 Leoni: 303195	6,6mm	AWG 24-20 AWG 22-18	09 67 000 8476 09 67 000 3476			
Ha-VIS EtherRail® CAT 5 LSZH 4xAWG22/7 HARTING: 094560001020600						
BETAtrans GKW-ENX C-flex EN 50306-4 3P 300 V MM S 4 x 0,75, Leoni p/n: 314713	5,8	AWG 22-18	09 67 000 3476			

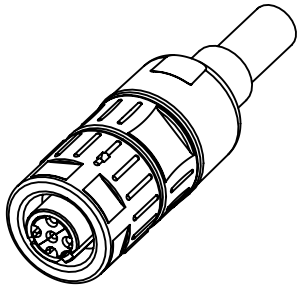

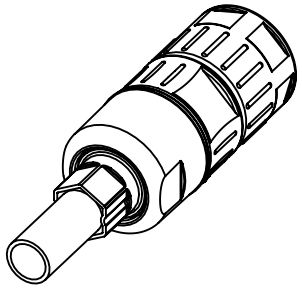

All Dimensions in mm Original Size DIN A4	Scale 1:1	Free size tol.		Ref. Sub.	
All rights reserved Department EL PD	Created by 408279	Inspected by FARCASIU	Standardisation ROEBEN	Date 2023-09-05	State Final Release
HARTING D-32339 Espelkamp	Title M12 SD D-cod 4-pol Crimp Flange female				Doc-Key / ECM-Nr. 100703360/UGD/002/K 500000250958
	Type TB	Number 21038812411		Rev. K	Page 1/1

A4