Wall mounting socket outlet fused - housing dimensions 460x180 with residual current circuit breaker

Product description	
BALS-Prd.-Nr	15171
EAN	4024941151719
Product category	TE wall mounting socket outlet, fused
Current	125A
Number of poles	4p
Arangement of phases	3P+PE
Position of earth contact	6 h
Voltage	380 - 415V~

CEE-Norm UK Ltd. Unit 2, Highbridge Court, Stafford Park 1, TF3 3BD Telford UK
phone: +44 1952 212700 / fax: +44 1952 212711 / email: sales@ceenorm.co.uk

Product description	
Frequency	50/60Hz
Protection degree	IP67
Colour code	red RAL 3000
Colour of appliance	Operating window smoky topaz, Hinged lid red RAL 3000, Bayonet ring grey RAL 7035, Housing screws grey RAL 7035, Housing bottom grey RAL 7035, Housing top grey RAL 7035
Connection design	screw terminal as box terminal with Kontex-contact
Maximum conductor size	70.0 qmm (possible limitation by the used cable entry)
Cable entry	top entry M40 bottom entry M50/M40
Height	512mm
Width	180mm
Depth	210mm
Dimension of enclosure	460x180 mm (HxW)
Material of enclosure	Polycarbonate
Contacts	the contact carrier is made of high temperature resistant material, the contacts are brass nickel plated

Additional technical properties	
	The cable entry is one at top and two at bottom open
	With 4 pole 125/0.5A RCCB

Logistics data	
Weight/pcs	0.0 kg / Piece

CEE-Norm UK Ltd. Unit 2, Highbridge Court, Stafford Park 1, TF3 3BD Telford UK
phone: +44 1952 212700 / fax: +44 1952 212711 / email: sales@ceenorm.co.uk

Logistics data	
Packaging	Carton
Content amount	1 ST
EAN	4024941151719
Length	560 mm
Width	215 mm
Height	260 mm
Weight	0.462 kg
Volume	26,400 ccm

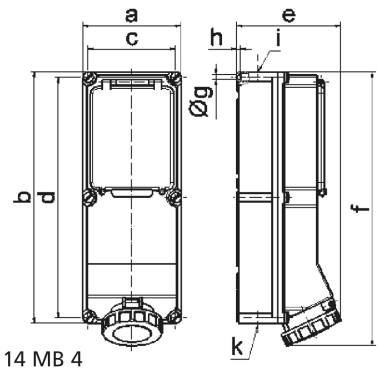

Ampere Polzahl	63 3	63 4	63 5	125 4	125 5
a	180,0	180,0	180,0	180,0	180,0
b	460,0	460,0	460,0	460,0	460,0
c	160,0	160,0	160,0	160,0	160,0
d	440,0	440,0	440,0	440,0	440,0
e	191,0	191,0	191,0	210,0	210,0
f	500,0	500,0	500,0	512,0	512,0
g ø	8,3	8,3	8,3	8,3	8,3
h	6,5	6,5	6,5	6,5	6,5
i	M40	M40	M40	M40	M40
k	M32/40	M32/40	M32/40	M40/50	M40/50

CEE-Norm UK Ltd. Unit 2, Highbridge Court, Stafford Park 1, TF3 3BD Telford UK
phone: +44 1952 212700 / fax: +44 1952 212711 / email: sales@ceenorm.co.uk