Connector - with TE screw terminals for harsh applications

Product description	
BALS-Prd.-Nr	31500
EAN	4024941315005
Product category	TE connector
Current	63A
Number of poles	5p
Arangement of phases	3p+N+PE
Position of earth contact	10 h
Voltage	> 50V~

CEE-Norm UK Ltd. Unit 2, Highbridge Court, Stafford Park 1, TF3 3BD Telford UK
phone: +44 1952 212700 / fax: +44 1952 212711 / email: sales@ceenorm.co.uk

Product description	
Frequency	100 - 300Hz
Protection degree	IP44
Colour code	green RAL 6002
Colour of appliance	Hinged lid green RAL 6002, Housing cover grey RAL 7035, Cable gland grey RAL 7035, Collar grey RAL 7035
Connection design	screw terminal as box terminal with Kontex-contact
Maximum conductor size	16,0 qmm
Cable entry	with cable gland
Height	252mm
Width	97mm
Depth	109mm
Material of enclosure	Polyamide
Contacts	the contact carrier is made of high temperature resistant material, the contacts are brass nickel plated

Additional technical properties	
	For cable diameter from 16 up to max. 36 mm, Screwless housing connection, MULTI-GRIP cable gland with gasket, integrated cable clamp and additional water evacuation openings

Logistics data	
Weight/pcs	0.775 kg / Piece
Packaging	Bag

CEE-Norm UK Ltd. Unit 2, Highbridge Court, Stafford Park 1, TF3 3BD Telford UK
phone: +44 1952 212700 / fax: +44 1952 212711 / email: sales@ceenorm.co.uk

Logistics data	
Content amount	1 ST
EAN	4024941315005
Length	109 mm
Width	97 mm
Height	252 mm
Weight	0.776 kg
Volume	2,664.396 ccm
Packaging	Carton
Content amount	5 ST
EAN	4024941834896
Length	325 mm
Width	217 mm
Height	210 mm
Weight	4.081 kg
Volume	13,588.4 ccm

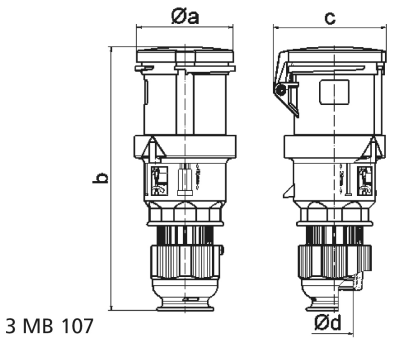

Ampere Polzahl	63 3	63 4	63 5
a ø	95,0	95,0	95,0
b	251,0	251,0	251,0
c	109,0	109,0	109,0
d ø	36,0	36,0	36,0
Leiter mm² min	6	6	6
Leiter mm² max	16	16	16

CEE-Norm UK Ltd. Unit 2, Highbridge Court, Stafford Park 1, TF3 3BD Telford UK
phone: +44 1952 212700 / fax: +44 1952 212711 / email: sales@ceenorm.co.uk