Portable distributor - rubber - Distributor - solid rubber - portable

Product description	
BALS-Prd.-Nr	522144
EAN	4024941069861
Product category	Distributor, solid rubber, portable
Specification/Norm	DIN EN 61439-2
Protection degree	IP44
Colour of appliance	Housing bottom simular black RAL 9017, Housing top simular black RAL 9017
Height	297mm
Width	250mm

CEE-Norm UK Ltd. Unit 2, Highbridge Court, Stafford Park 1, TF3 3BD Telford UK
phone: +44 1952 212700 / fax: +44 1952 212711 / email: sales@ceenorm.co.uk

Product description	
Depth	210mm
RDF factor	1
Nominal current InA	32

Logistics data	
Weight/pcs	6.196 kg / Piece
Packaging	Carton
Content amount	1 ST
EAN	4024941069861
Length	370 mm
Width	360 mm
Height	325 mm
Weight	6.657 kg
Volume	39,060 ccm

CEE-Norm UK Ltd. Unit 2, Highbridge Court, Stafford Park 1, TF3 3BD Telford UK
phone: +44 1952 212700 / fax: +44 1952 212711 / email: sales@ceenorm.co.uk

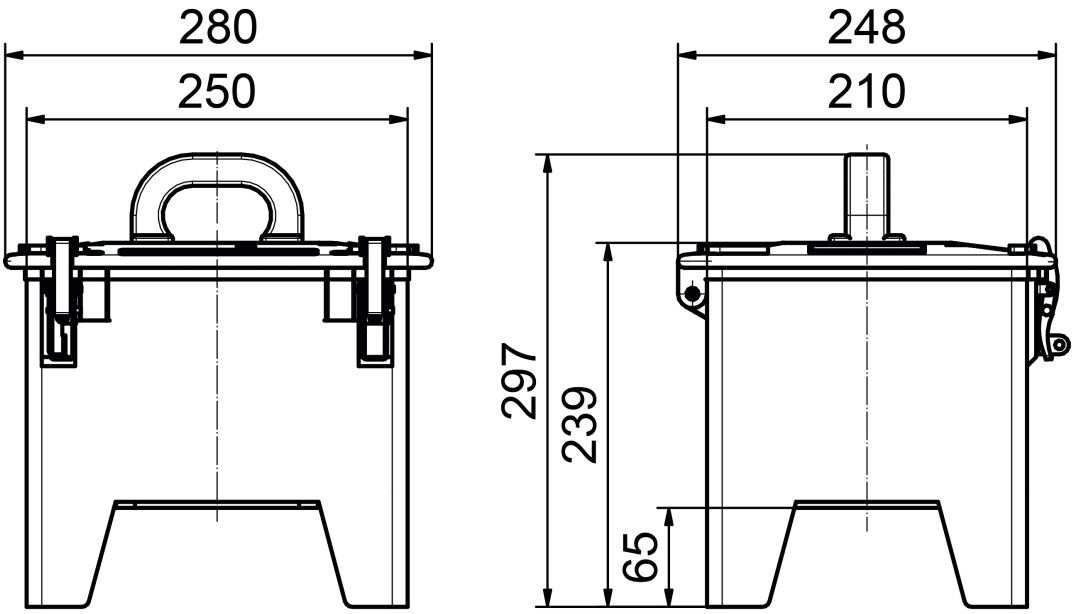

CEE-Norm UK Ltd. Unit 2, Highbridge Court, Stafford Park 1, TF3 3BD Telford UK
phone: +44 1952 212700 / fax: +44 1952 212711 / email: sales@ceenorm.co.uk