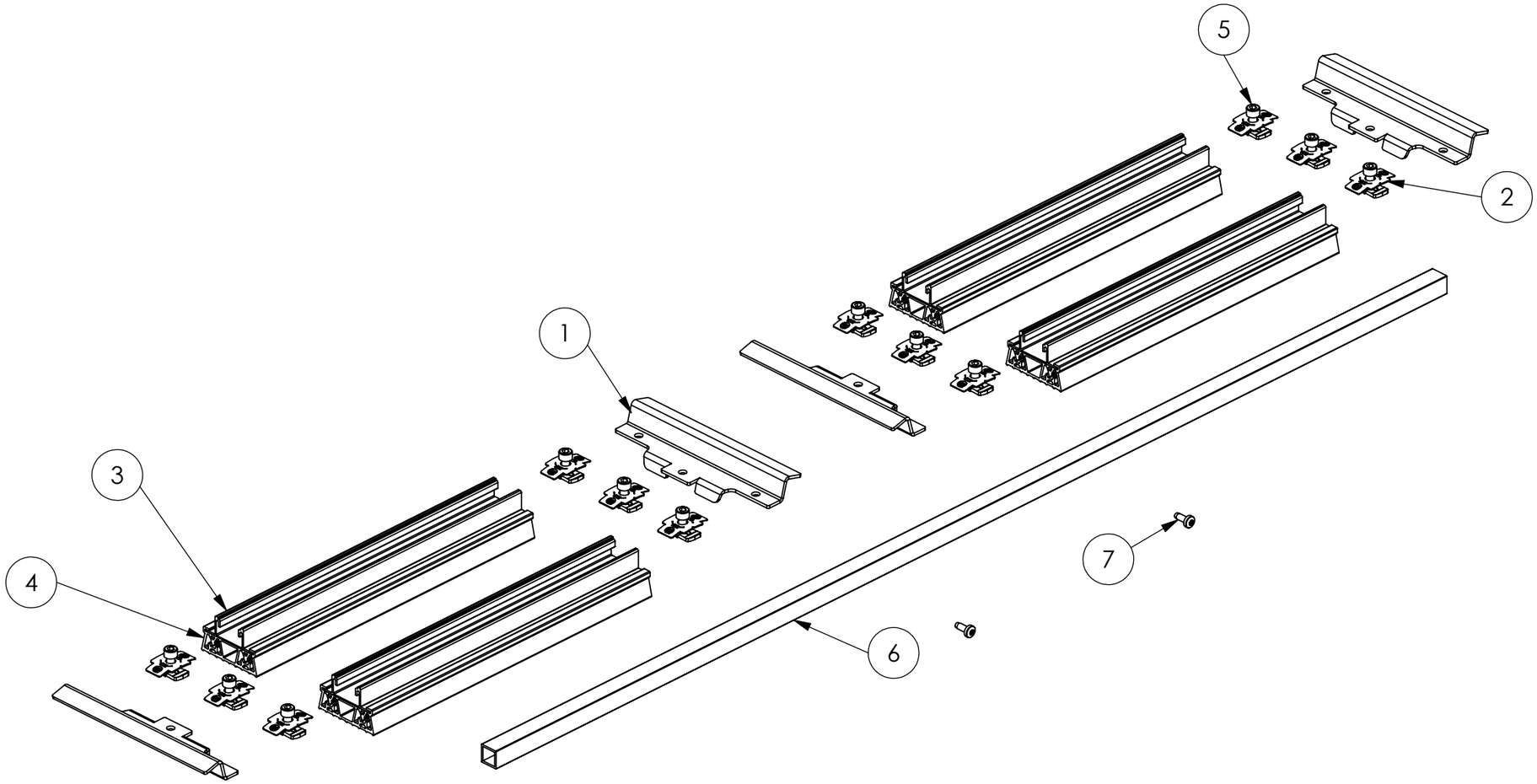

Pos.No.	Designation	Material	Quantity
1	K2 Buddy Dome Rail connector	1.0242 (S250GD+ZM310)	4
2	MK2	TPC/ 1.4301	12
3	Dome Buddy Accessory Rail 380	EN AW 6063 T66	4
4	Dome Mat S	EPDM Shore A 70	4
5	Socket head bolt serrated - sim. ISO 4762 - M8x20	A2-70	12
6	Module frame bracing 1.30m	S235JR (1.0038)	1
7	Thread-forming metal screw_TX M6x16 DIN7500	Verzinkter Stahl	2

K2 Systems GmbH
Haldenstr. 1
71272 Renningen
Germany
+49 7159 42059-0

Designation:
Data sheet K2 Buddy Dome Rail Set 35 mm

	Name	Date	Material:		Item no.:	2004663	A3
Designed	A. Khippal	11.11.2024					
Approved	M. Littek	11.11.2024	Surface:		Drawing no.:	12-051-00	All dimensions in mm
Last change			Weight: ca. 5783.02 g/pc	Scale: 1:10			Sheet 1 of 1

This drawing is the sole property of K2 Systems GmbH. It is protected by copyright and may only be copied, reproduced or distributed to a third party with explicit permission!