Alle Rechte vorbehalten/ *All rights reserved*

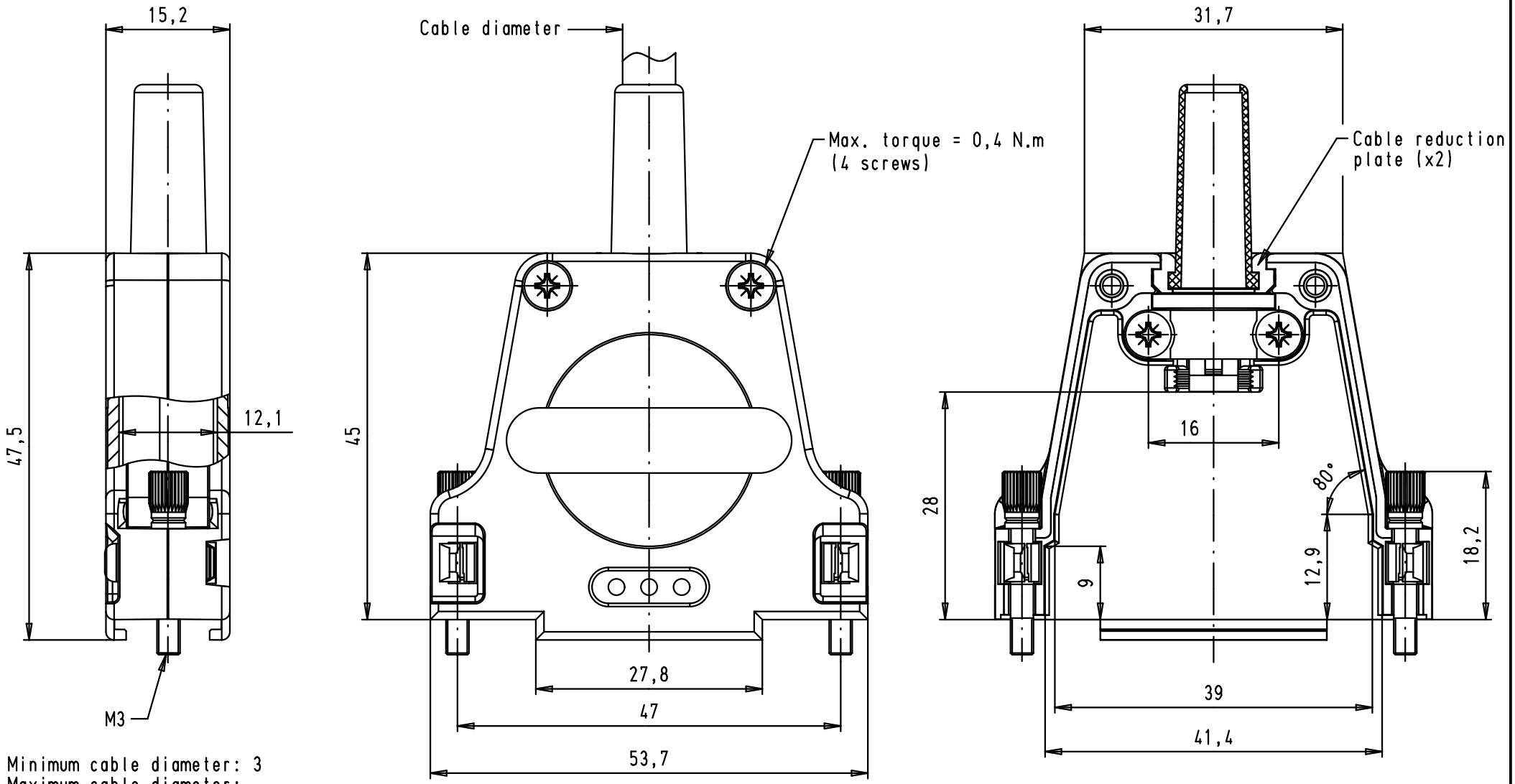

Minimum cable diameter: 3
Maximum cable diameter:
- with rubber bushing: 8
- without rubber bushing: 8,5
- without reduction plate: 12,5

				Dat.	Name
			Detail.	18/04/08	PK
			Insp.		
			Stand.		
EC00376	24/07/09	PK			
34914	18/04/08	PK			
Mod.	Dat.	Name			

All Dim. in mm
Orig. Size DIN A 4

HARTING EURL
F-95972 Paris

D-Sub, 25 poles,
top entry,
straight metal hood

Maßstab/ *Scale* 1,5:1

TB 09 67 025 0321

Sub.

Blatt/ *Page* 1/1

Released / Freigegeben 2009/08/14-13:12:35 UTC