lightnet

Matric-F5

Recessed mounted light line, mounting brackets incl - Direct light distribution

Article code: LF5AEE-830E-L1198

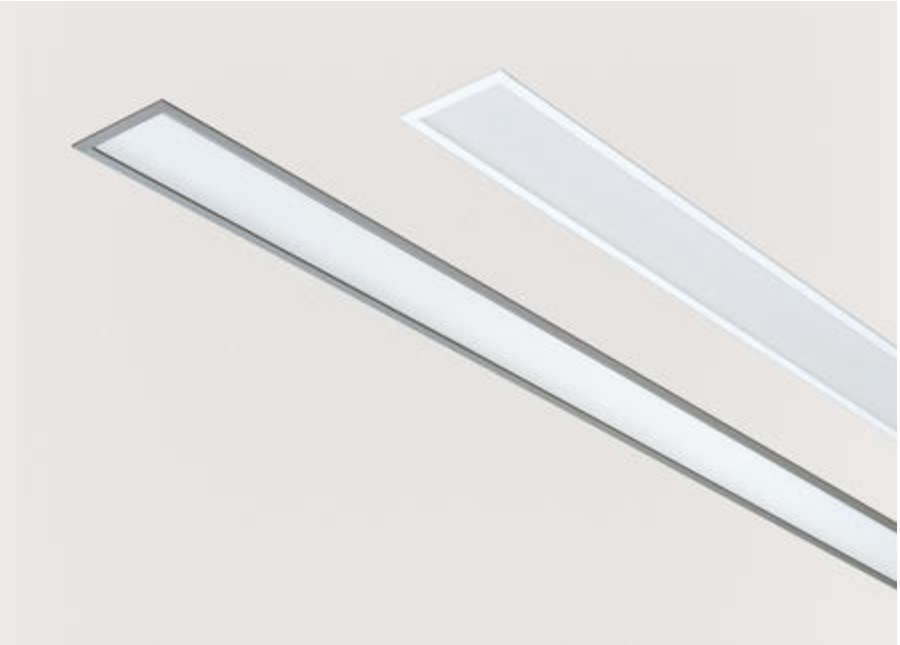

Illustrations may only be similar and serve as an orientation.

Matric-F5. LED. Recessed mounted light line with surrounding frame for installation in sawn wall and ceiling with cut-out openings. Mounting brackets included. Luminaire body made of high-quality aluminum profile. Surface finish Silver Anodised. Direct only light distribution.Colour temperature: 3000K (Warm White). Colour Rendering Index (CRI): >80. Microprismatic screen for uniform illumination and reduced luminance in office areas. UGR<=19. Switchable. LxWxH (rectangular). L= 1198mm. W=100mm. H=90mm. Low-power current. 1879lm. 19W. 4kg. Binning initial <= MacAdam 3. IP20. Protection class I. CE, UKCA marking. Prüfzeichen: ENEC. IK02. 220-240V. 50-60 Hz. RG0 (EN62471). Luminous flux reduction up to 0,2%/1.000 operating hours. Nominal failure rate: 0,2%/1.000 operating hours. L90B10 (tq 25°C) = 50.000h. 5 years warranty. Manufacturer: Lightnet GmbH, ISO 9001:2015 certificated

© Lightnet GmbH, Zollstockgürtel 65, D-50969 Köln, Tel. +49 (0) 221 22 25 26-0, Fax +49 (0) 221 22 25 26-99, info@lightnet.de, www.lightnet.de
We reserve the right to make mistakes or modifications. Illustrations may only be similar and serve as an orientation. Kindly always check you are working with current version of mounting instruction.

Date: 18.07.2023

lightnet

Matric-F5

Recessed mounted light line, mounting brackets incl - Direct light distribution

Article code: LF5AEE-830E-L1198

Customer / Project:

Note:

Productname	Matric-F5
Lamp	LED
Installation Type	Recessed mounted light line, mounting brackets incl
Surface finish	Silver Anodised
Light characteristics	Direct light distribution
Colour temperature	3000K
Colour Rendering Index (CRI)	CRI>80
Optical system	Microprismatic screen
Control	Switchable
Length L/Diameter D (mm)	L=1198mm
Width W (mm)	W=100mm
Height H (mm)	H=90mm
Current/Power	Low-Power
Luminous Flux	1879lm
Power consumption	19W
Degree of protection	IP20
Certification	Prüfzeichen: ENEC
LED lifetime	L90B10 (tq 25°C) = 50.000h
UGR	UGR<=19
Photometric code	8 30 / 3 3 9
Photobiological class	RG0 (EN62471)
Indoor/Outdoor	Indoor: ta [ambient] max. 25°C
Weight (kg)	4kg

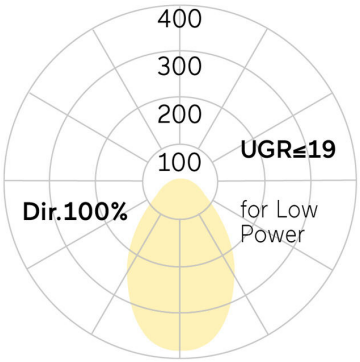

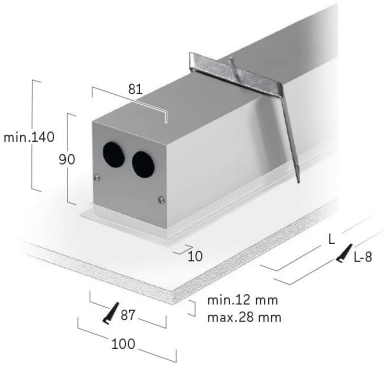

© Lightnet GmbH, Zollstockgürtel 65, D-50969 Köln, Tel. +49 (0) 221 22 25 26-0, Fax +49 (0) 221 22 25 26-99, info@lightnet.de, www.lightnet.de
We reserve the right to make mistakes or modifications. Illustrations may only be similar and serve as an orientation. Kindly always check you are working with current version of mounting instruction.

Date: 18.07.2023