lightnet

Lightnet GmbH
Zollstockgürtel 65
50969 Köln / Germany
Tel.: +49 (0) 221 22 25 26-0
E-Mail: info@lightnet.de
www.lightnet.de

MATRIC AX | SYSTEM 40MM SURFACE

1. MONTAGE UND INSTALLATION | MOUNTING AND INSTALLATION:

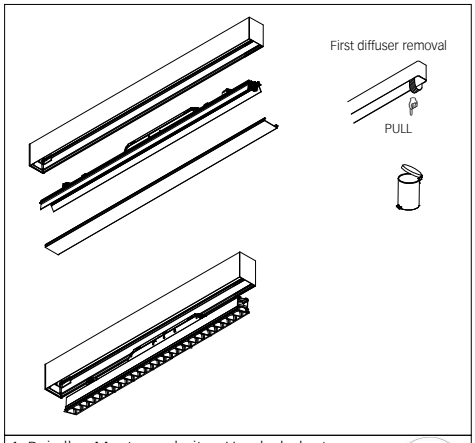

1. Bei allen Montagearbeiten Handschuhe tragen.
Use gloves when handling the fixture.

L1[mm] = L[mm] - 400mm	
Opal / Microprismatic / Wallwasher / Ambient	Lens Louvre
L[mm]	L[mm]
600	665
890	930
1182	1194
1475	1458
1765	1723
2055	1987

2. Montageöffnungen.
Installation openings.

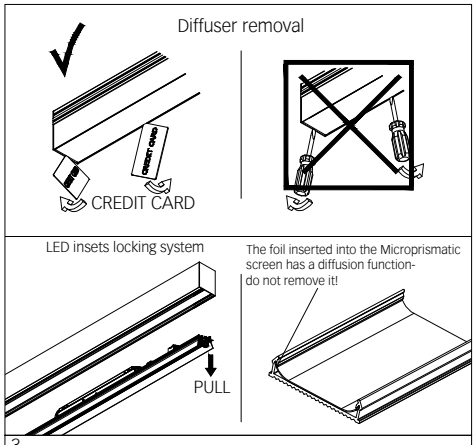

3.

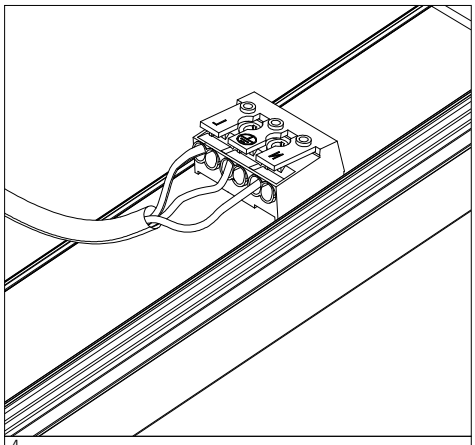

4.
- min/max stripped wire length: 7mm-10mm
- max power supply cable: 1,5mm^2

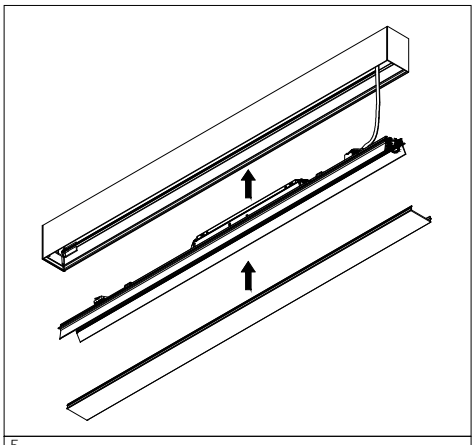

5.

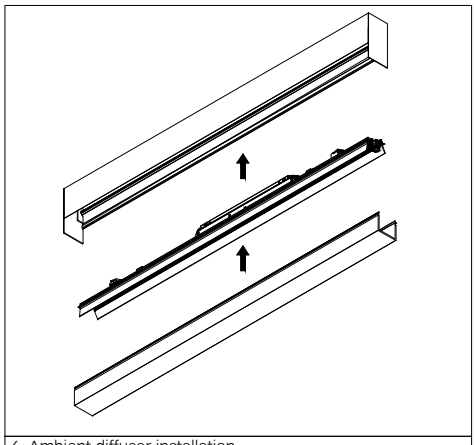

6. Ambient diffuser installation.

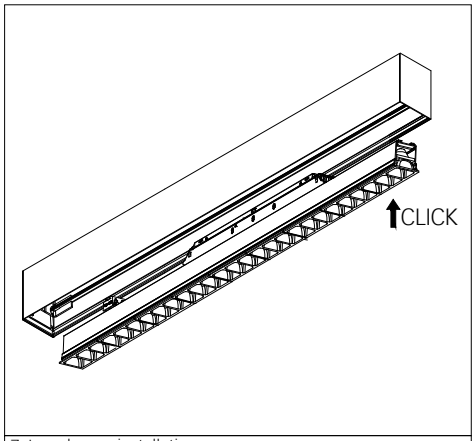

7. Lens louvre installation.

The light source contained in this luminaire shall only be replaced by the manufacturer or his service agent or a similar qualified person.