A
board drillings

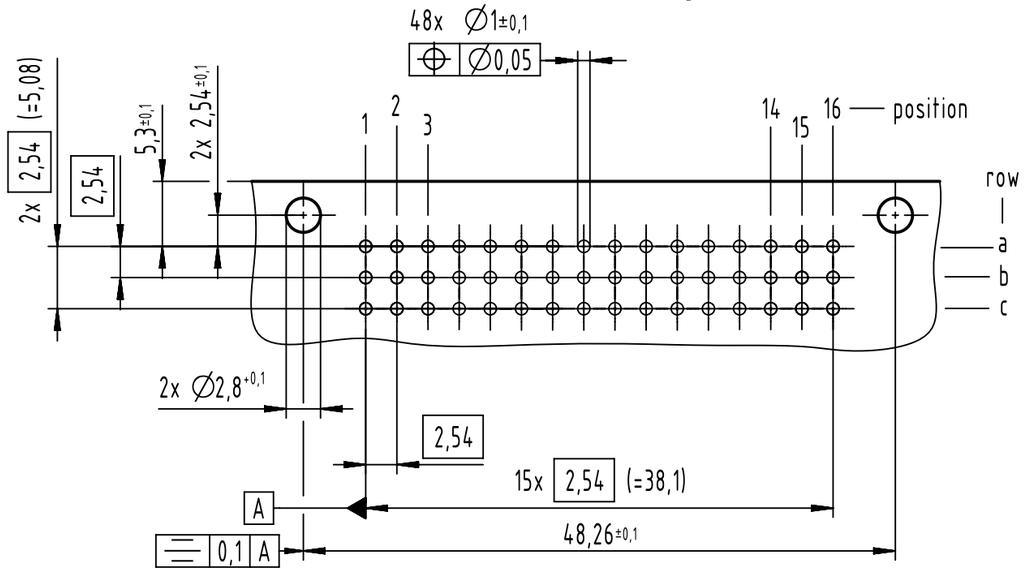

B
contact arrangement

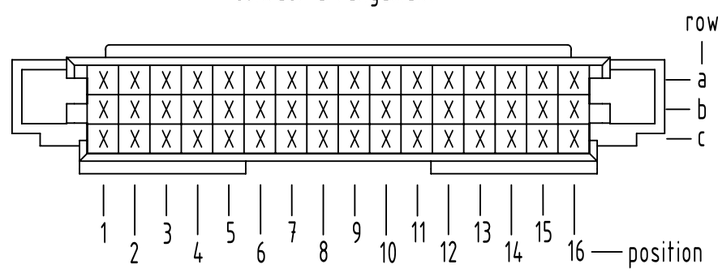

48 signal contacts

X = position with contact

□ = position without contact

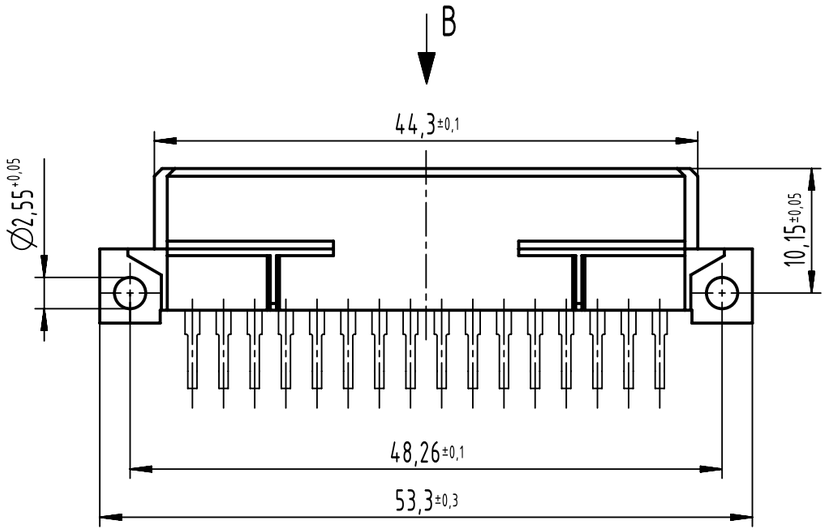

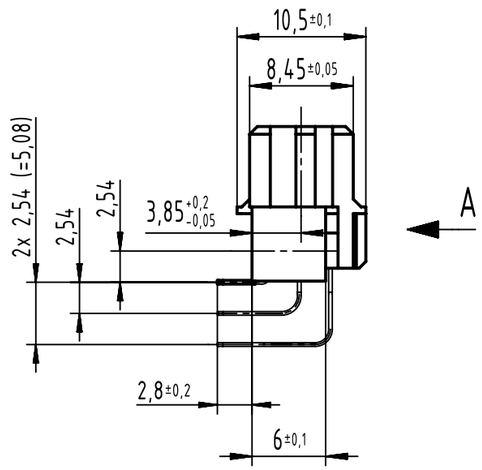

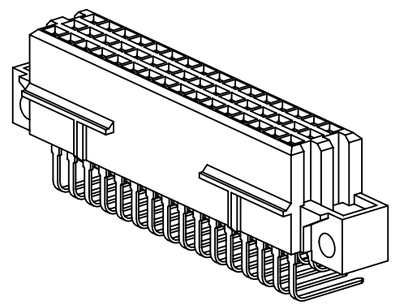

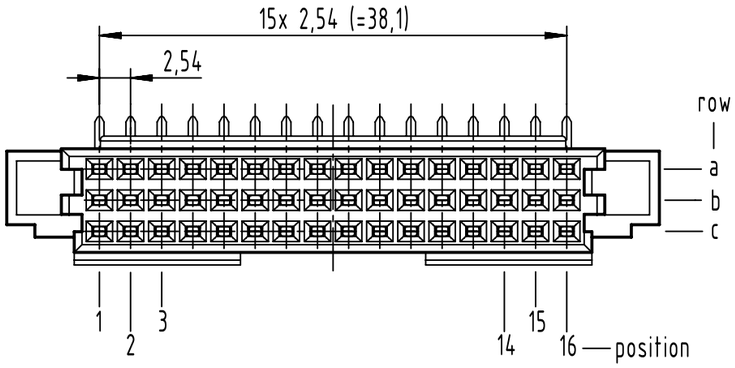

further information see product data sheet

09 28 248 6804	2
part no.	performance level

All Dimensions in mm Original Size DIN A3	Scale 2:1	Free size tol. complementary IEC 60603-2		Ref. Sub.	
All rights reserved Department EL PD	Created by 00103855	Inspected by STORCK	Standardisation	Date 2024-02-05	State Final Release
HARTING D-32339 Espelkamp	Title DIN Signal type 2R female angled THR 48-pole				Doc-Key / ECM-Nr. 100613548/UGD/033/C 500000259028
	Type TB	Number 0928248X804		Rev. C	Page 1/1

A3