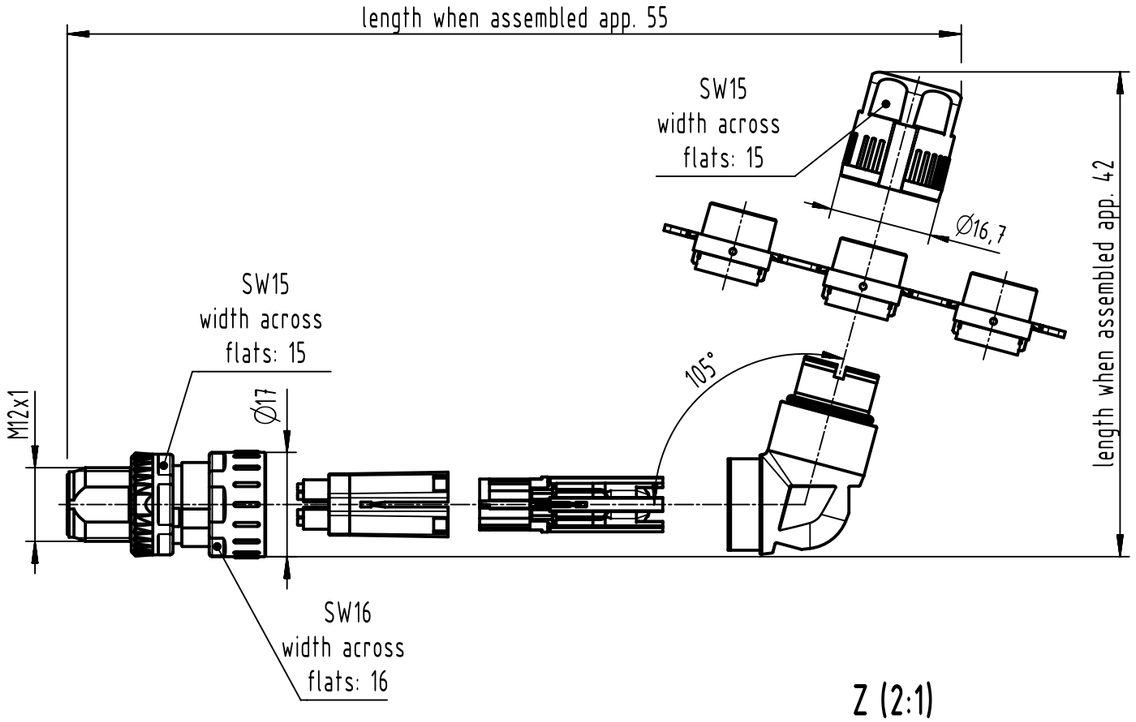


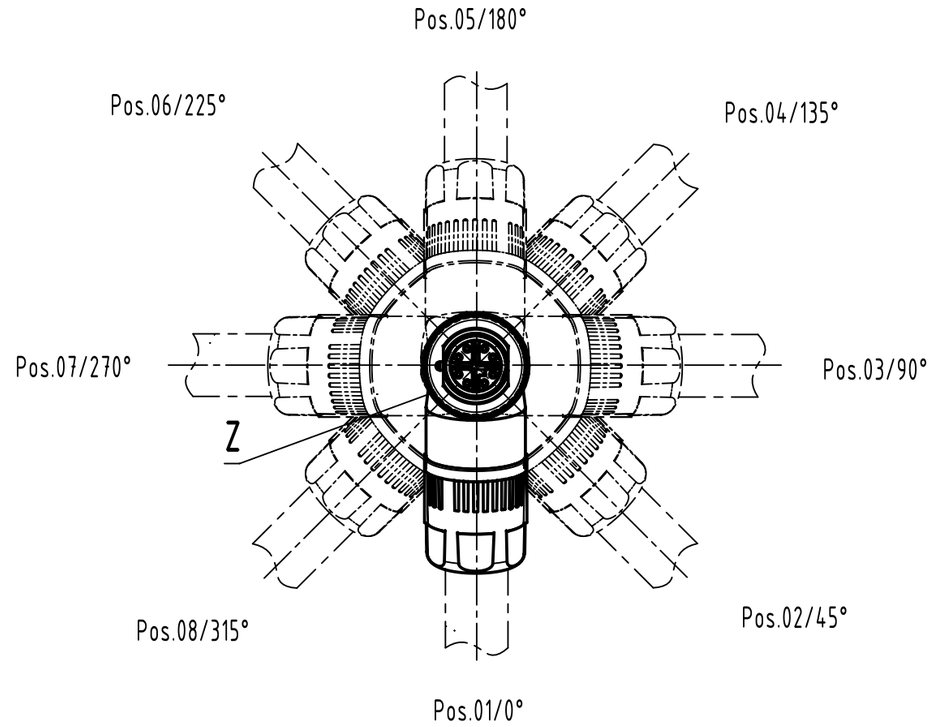


## Z (2:1)

contact face acc. to
IEC 61076-2-109

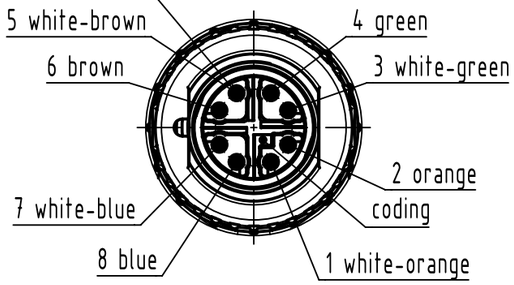


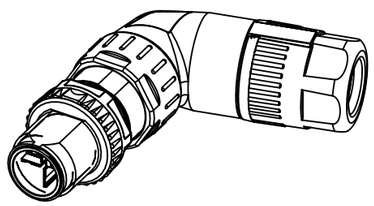

order contacts separately

| cableØ | wire gauge | contact part-no. |
|---|---|---|
| 5,7-8,8mm | AWG 26-23 | 21 01 100 9019 |
| | AWG 28-24 | 21 01 100 9014 |

All Dimensions in mm
Original Size DIN A3

Scale 1:1

Free size tol.

Ref.

Sub.

All rights reserved

Department EL PD

Created by SERBANA

Inspected by FARCASIU

Standardisation RUETERA

Date 2023-11-03

State Final Release

Title M12-SD-CC-CRIMP-8P-XCOD-M-ANG-SHLD

Doc-Key / ECM-Nr.
100584878/UGD/002/K
500000250956

HARTING
D-32339 Espelkamp

Type TB

Number 21038813805

Rev. K

Page 1/1

A3