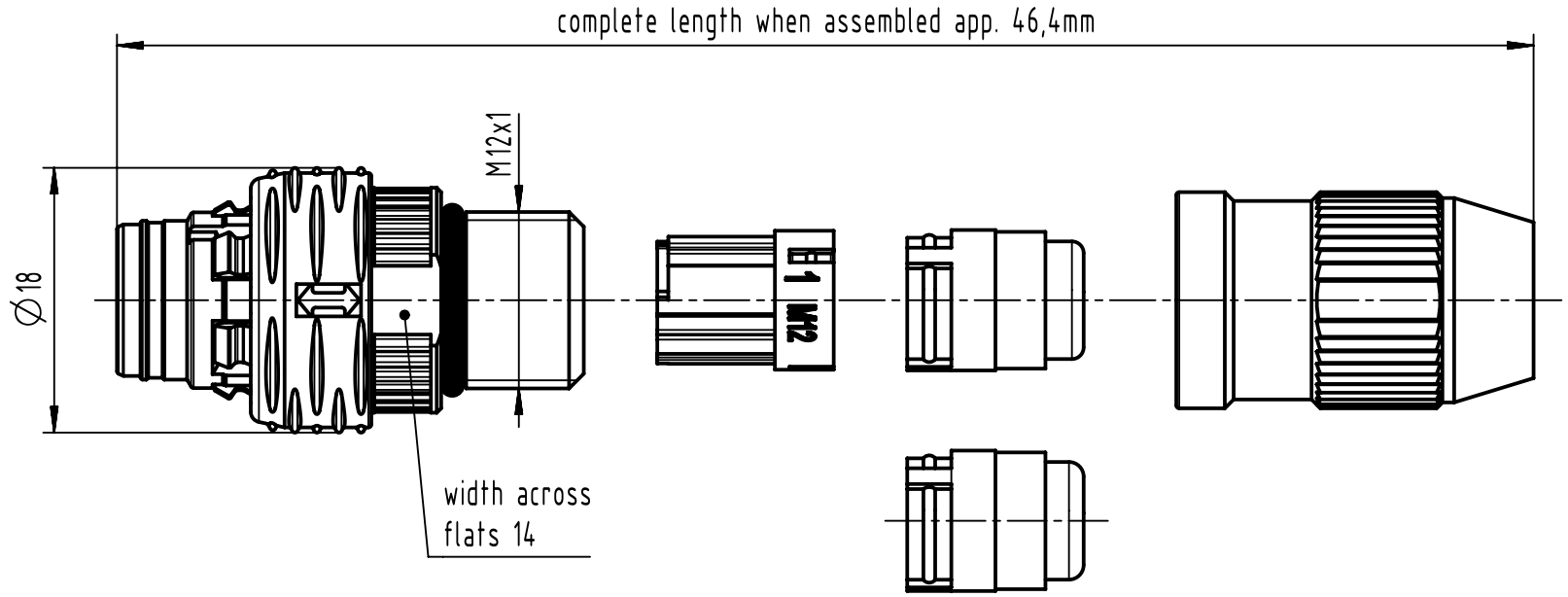

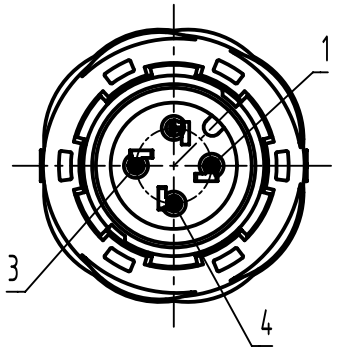

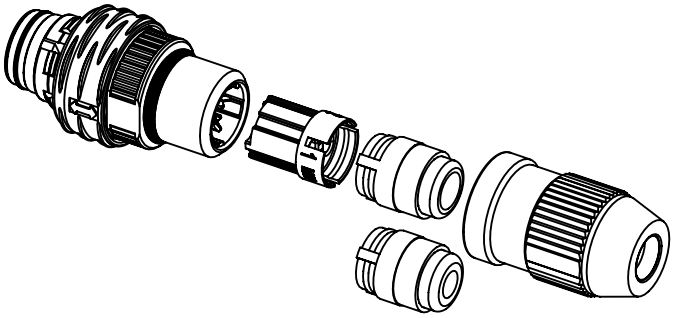

cable outside diameter	conductor cross section
2,9mm-5,1mm	AWG 26-22 0,14mm²-0,34mm²

All Dimensions in mm Original Size DIN A4	Scale 2:1	Free size tol.		Ref. Sub.	
All rights reserved Department EL PD	Created by HASSE	Inspected by 104125	Standardisation	Date 2021-12-06	State Final Release
HARTING D-32339 Espelkamp	Title M12-S-PPI-CC-IDC-3P-ACOD-M-STR				Doc-Key / ECM-Nr. 100906790/UGD/000/A 500000207464
	Type TB	Number 21031111315		Rev. A	Page 1/1

A4