Wall mounting socket outlet switched fused - housing dimensions 365x134 with fuse base D 0

Product description	
BALS-Prd.-Nr	1777
EAN	4024941017770
Product category	Wall mounting socket outlet, switched, fused
Current	32A
Number of poles	4p
Arangement of phases	3P+PE
Position of earth contact	6 h
Voltage	380 - 415V~

Bals-Polska Elektrotechnika Sp. Z o.o. ul. ubniaska 4a, 46-024 Brynica PL
phone: +48 77 4016 210 / fax: +48 77 4016 215 / email: kontakt@bals.pl

Product description	
Frequency	50/60Hz
Protection degree	IP44
Colour code	red RAL 3000
Colour of appliance	Operating window smoky topaz, Hinged lid red RAL 3000, Housing screws grey RAL 7035, Housing bottom grey RAL 7035, Housing top grey RAL 7035, Control knob grey RAL 7035
Connection design	screwless spring terminals with KONTEX-contact
Maximum conductor size	10,0 qmm
Cable entry	top entry M40/M32 bottom entry M40/32
Height	391mm
Width	134mm
Depth	153mm
Dimension of enclosure	365x134 mm (HxW)
Material of enclosure	Polycarbonate
Contacts	the contact carrier is made of high temperature resistant material, the contacts are brass nickel plated

Additional technical properties	
	cable entry two at top and two at bottom (open)
	In 0-position lockable for 3 padlocks with bow diameter up to 7 mm
	With fuse base 3 pole D02

Bals-Polska Elektrotechnika Sp. Z o.o. ul. ubniaska 4a, 46-024 Brynica PL
phone: +48 77 4016 210 / fax: +48 77 4016 215 / email: kontakt@bals.pl

Logistics data	
Weight/pcs	0.0 kg / Piece
Packaging	Carton
Content amount	1 ST
EAN	4024941017770
Length	387 mm
Width	222 mm
Height	150 mm
Weight	0.193 kg
Volume	11,029.5 ccm

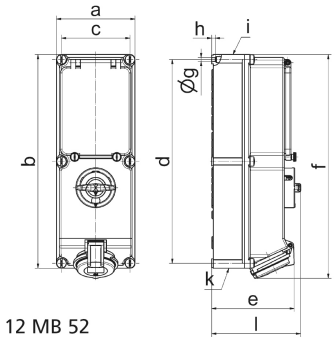

12 MB 52

Ampere Polzahl	16 3	16 4	16 5	32 3	32 4	32 5
a	134,0	134,0	134,0	134,0	134,0	134,0
b	365,0	365,0	365,0	365,0	365,0	365,0
c	117,0	117,0	117,0	117,0	117,0	117,0
d	348,0	348,0	348,0	348,0	348,0	348,0
e	129,0	135,0	141,0	146,0	146,0	152,0
f	384,0	382,0	382,0	391,0	391,0	391,0
g ø	6,5	6,5	6,5	6,5	6,5	6,5
h	8,0	8,0	8,0	8,0	8,0	8,0
i	M25/20	M32/25	M32/25	M40/32	M40/32	M40/32
k	M25/20	M32/25	M32/25	M40/32	M40/32	M40/32
l	156,0	156,0	156,0	156,0	156,0	156,0
Leiter mm² min	1,5	1,5	1,5	2,5	2,5	2,5
Leiter mm² max	4	4	4	10	10	10

Bals-Polska Elektrotechnika Sp. Z o.o. ul. ubniaska 4a, 46-024 Brynica PL
phone: +48 77 4016 210 / fax: +48 77 4016 215 / email: kontakt@bals.pl