Panel mounting socket outlet straight - flange 91x91 fixing centers 70x70

Product description	
BALS-Prd.-Nr	13108
EAN	4024941131087
Product category	Panel mounting socket outlet, straight
Current	16A
Number of poles	5p
Arangement of phases	3p+N+PE
Position of earth contact	6 h
Voltage	200/346 - 240/415V~

Bals-Polska Elektrotechnika Sp. Z o.o. ul. ubniaska 4a, 46-024 Brynica PL
phone: +48 77 4016 210 / fax: +48 77 4016 215 / email: kontakt@bals.pl

Product description	
Frequency	50/60Hz
Protection degree	IP44
Colour code	red RAL 3000
Colour of appliance	Hinged lid grey RAL 7035, Enclosure grey RAL 7035
Connection design	with screw terminal
Maximum conductor size	4,0 qmm
Cable entry	other
Height	91mm
Width	91mm
Depth	64mm
Flange size vertical in mm	91mm
Flange size horizontal in mm	91mm
Drill hole dist. vertical mm	70mm
Drill hole dist. horizontal mm	70mm
Material of enclosure	Polyamide
Contacts	the contact carrier is made of polyamide, the contacts are brass

Additional technical properties	
	For mounting in cable trunkings

Bals-Polska Elektrotechnika Sp. Z o.o. ul. ubniaska 4a, 46-024 Brynica PL
phone: +48 77 4016 210 / fax: +48 77 4016 215 / email: kontakt@bals.pl

Logistics data	
Weight/pcs	0.215 kg / Piece
Packaging	Bag
Content amount	1 ST
EAN	4024941131087
Length	64 mm
Width	91 mm
Height	91 mm
Weight	0.216 kg
Volume	529.984 ccm
Packaging	Carton
Content amount	10 ST
EAN	4024941966306
Length	258 mm
Width	183 mm
Height	212 mm
Weight	2.302 kg
Volume	8,750 ccm

Bals-Polska Elektrotechnika Sp. Z o.o. ul. ubniaska 4a, 46-024 Brynica PL
phone: +48 77 4016 210 / fax: +48 77 4016 215 / email: kontakt@bals.pl

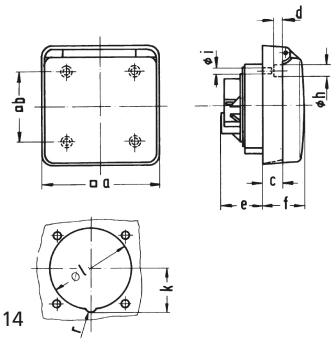

4 MB 14

Ampere Polzahl	16 3	16 5	32 5
a ❒	91,0	91,0	90,0
b ❒	70,0	70,0	60,0
c	15,2	15,2	-
d ø	2,7	2,7	-
e	28,0	28,0	31,0
f	36,0	36,0	39,5
h ø	7,5	7,5	-
i ø	4,8	4,8	4,1
k	-	34,0	42,5
l	54,0	64,0	75,0
r	-	10,0	10,0
Leiter mm² min	1,5	1,5	2,5
Leiter mm² max	4	4	10

Bals-Polska Elektrotechnika Sp. Z o.o. ul. ubniaska 4a, 46-024 Brynica PL
phone: +48 77 4016 210 / fax: +48 77 4016 215 / email: kontakt@bals.pl